ARTE LAMP

ASSEMBLY INSTRUCTION
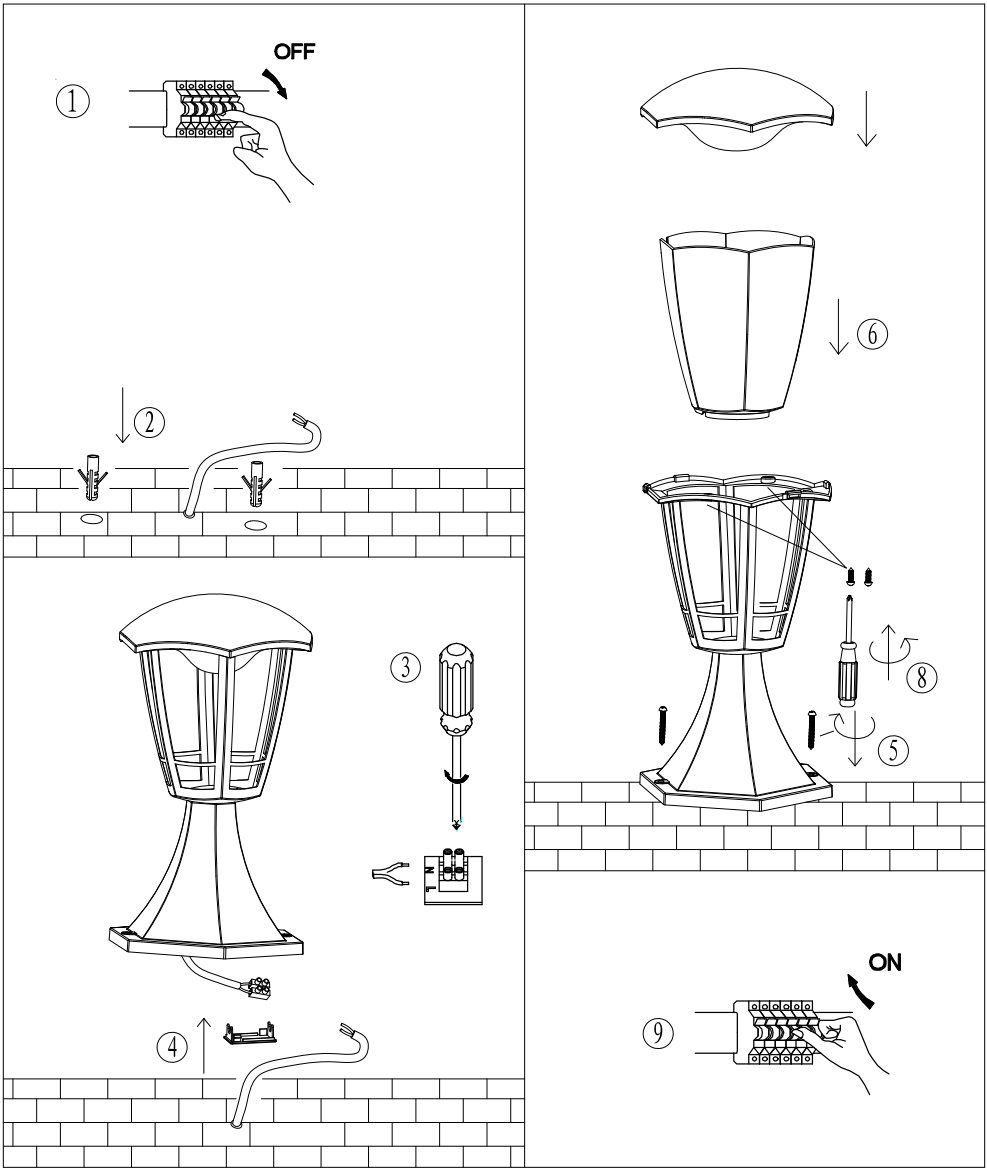
ИНСТРУКЦИЯ A6064FN-1BK