ARTE LAMP

ASSEMBLY INSTRUCTION

ИНСТРУКЦИЯ
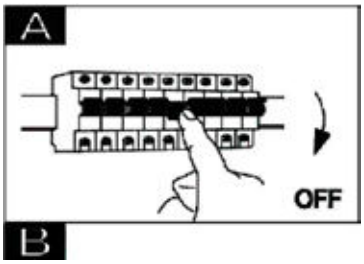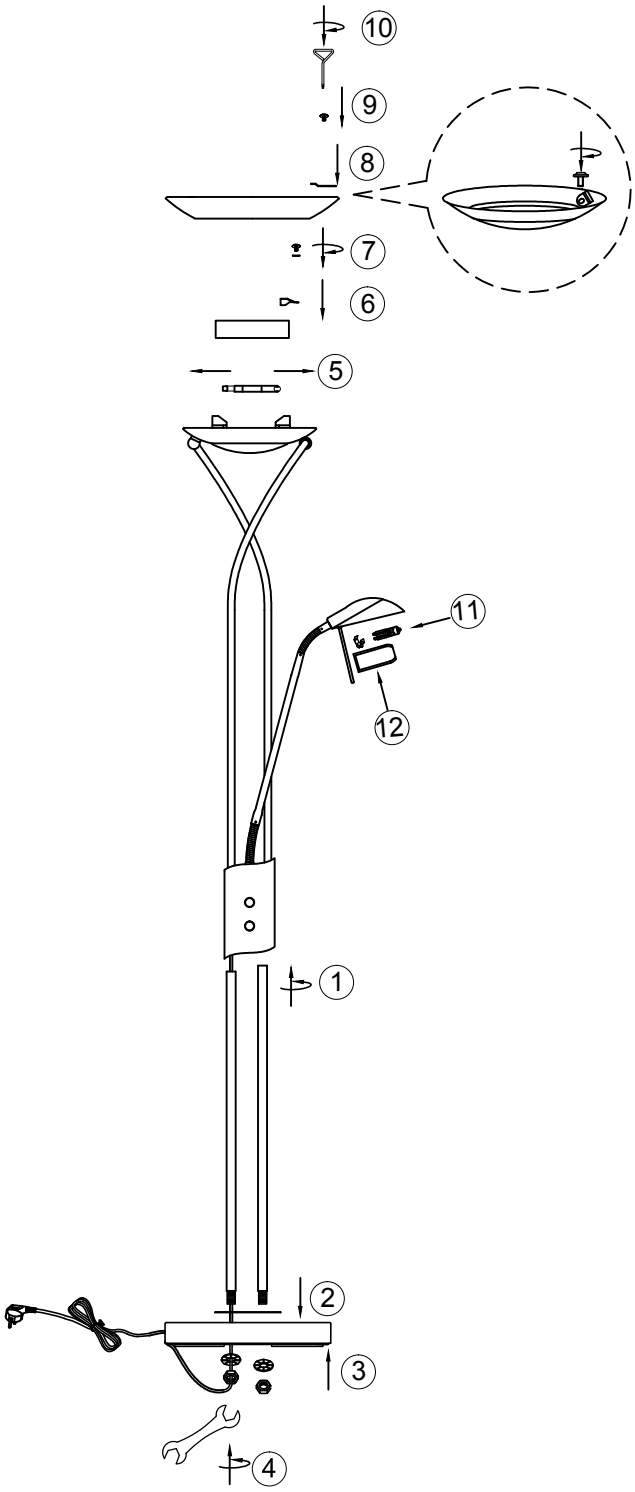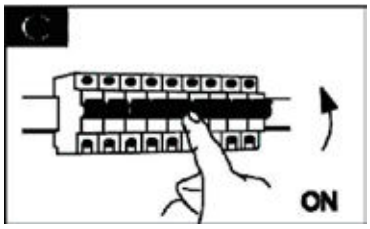
A4399PN-2