ARTE LAMP

ASSEMBLY INSTRUCTION

A4280LT-1CC

ИНСТРУКЦИЯ

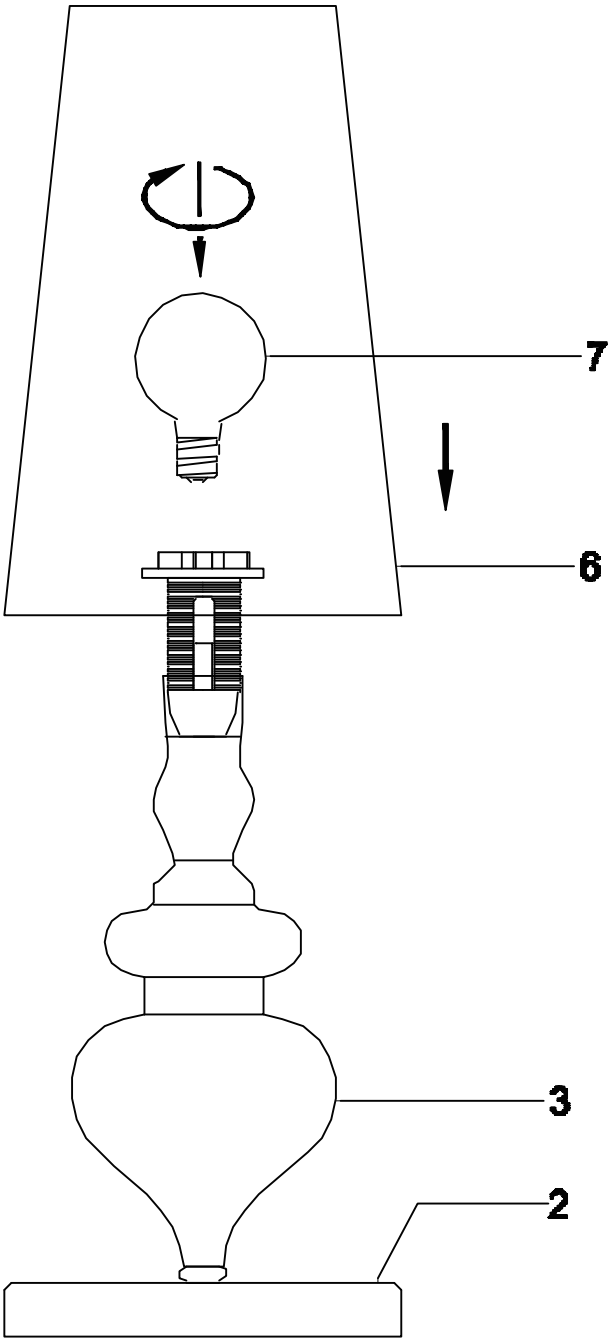

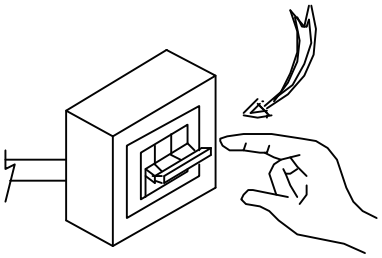

OFF 1

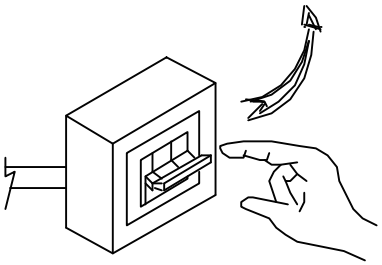

ON 8