ARTE LAMP

ASSEMBLY INSTRUCTION
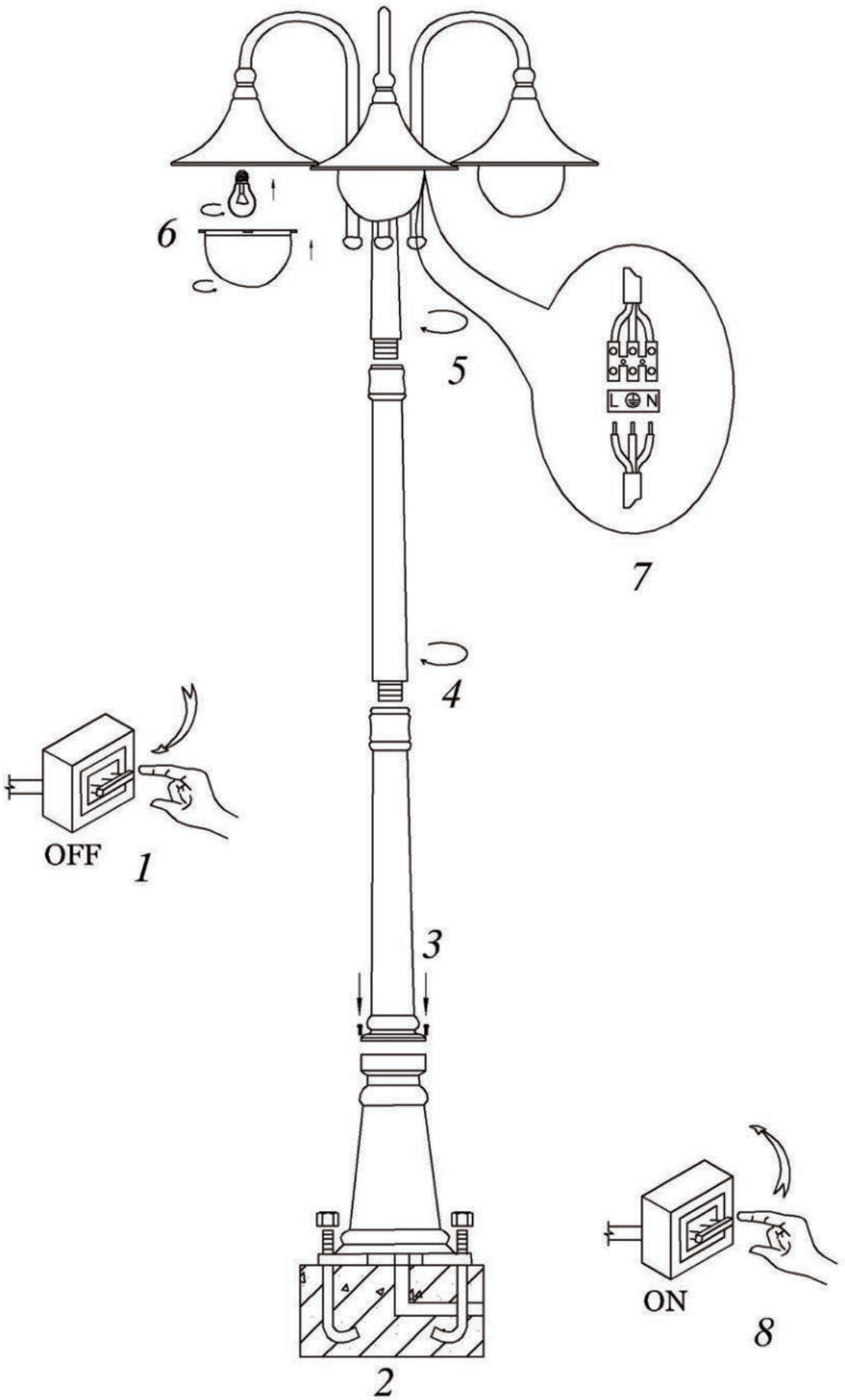
ИНСТРУКЦИЯ A1086PA-3BG